Congratulations on the purchase of your new DMI Sports Pool table. Our products are designed and manufactured to give you years of game playing enjoyment.

☑ ***KEEP BOX AND PACKING MATERIAL UNTIL TABLE HAS BEEN COMPLETELY ASSEMBLED.***

☑ ***ALL DAMAGE MUST BE REPORTED TO DMI WITHIN TEN DAYS OF RECEIPT.***

☑ ***If you have any problems with your new product,***

PLEASE DO NOT RETURN IT TO THE STORE.

Please contact us:

1.800.399.4402

FAX: 215.283.9573

Please have your model number when inquiring about parts.

Or write to:
DMI Sports
Customer Service
375 Commerce Drive
Fort Washington PA, 19034

Please visit our web site at:

www.dmisports.com

When contacting DMI Sports, please provide your model number and item number (if applicable) if requesting a replacement part. Item numbers can be found inside this owners manual.

Your Model Number **MFT200-CT**

Your model number is also located on the original carton. These instructions are also available online at: www.dmisports.com.

IMPORTANT!

Please Keep Your Instructions! (You will need your Model number should you need to contact us.) Before attempting assembly, please read through this instruction book to familiarize yourself with all the parts and assembly steps. We recommend that two adults assemble this table. Please refer to the Parts Identifier on the following page and be sure that all parts have been included. Although extremely rare, occasionally a part may be missing. If you are missing a part, or if you have any questions, please call our customer service department at 1.800.399.4402 Mon-Fri between the hours of 9:00am and 5:00pm E.S.T; or you can reach us at: www.dmisports.com.

Do not return the game to the store. Please contact us first at: 1.800.399.4402 or on our website at: www.dmisports.com.

TWO ADULTS ARE REQUIRED TO ASSEMBLE THIS POOL TABLE

PARTS IDENTIFIER

HARDWARE PARTS

H1	Qty. 8	H2	Qty. 8
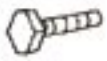 Leg Bolt RPMFT200-BOLT		Leg Washer RPMFT200-WASH	

ASSEMBLY PARTS

P1	Qty. 1	P2	Qty. 2	P3	Qty. 1	P4	Qty. 1
Main Frame RPMFT200-TABLE		Leg RPMFT200-LEG		Conversion Top MFCT-200		Table Tennis Net Set MFCT-200NP	

P5	Qty. 4
Leg Levelers RPMFT200-LEV	

ACCESSORY PARTS

A1	Qty. 1	A2	Qty. 2	A3	Qty. 1	A4	Qty. 2
Triangle, Plastic MFA40993		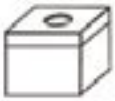 Chalk MFA42405		Billiard Balls MFA41655		2 Piece Billiard Cues MFR40432	

A5	Qty. 1
Wrench, Multi RPMFT200-MWRENCH	

ASSEMBLY

STEP 1.

Carefully remove all parts from the box.
Attach Legs (P2) to the Main Frame (P1) using Bolts (H1) and Washers (H2) as shown in Fig. 1.1.

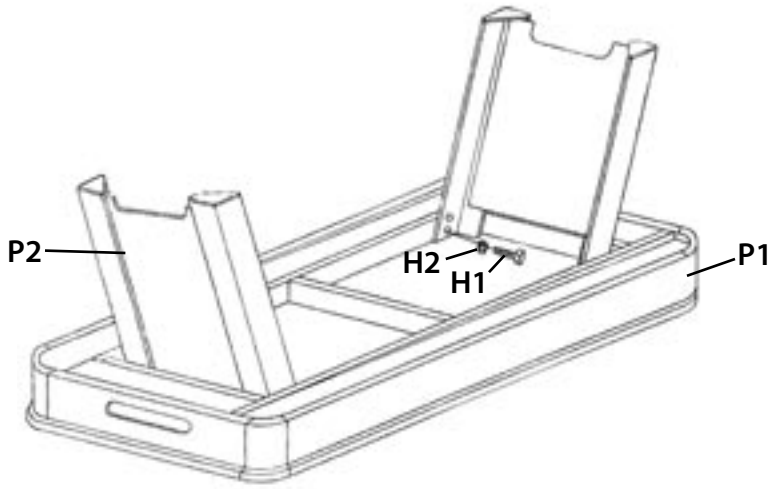

FIG 1.1

STEP 2.

Attach Leg Levelers (P5) to each Leg (P2) as shown below in FIG 2.1.

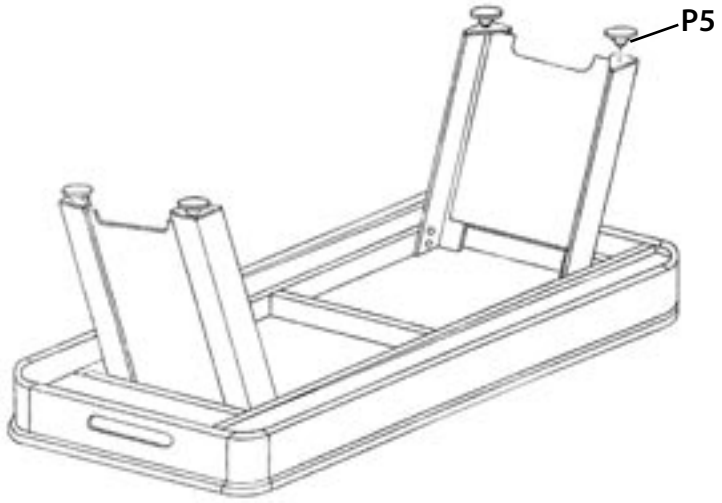

FIG 2.1

ASSEMBLY

STEP 3.

With the assistance of at least one other adult, carefully turn your table over.
Please refer to page 6 for leg leveling instructions.

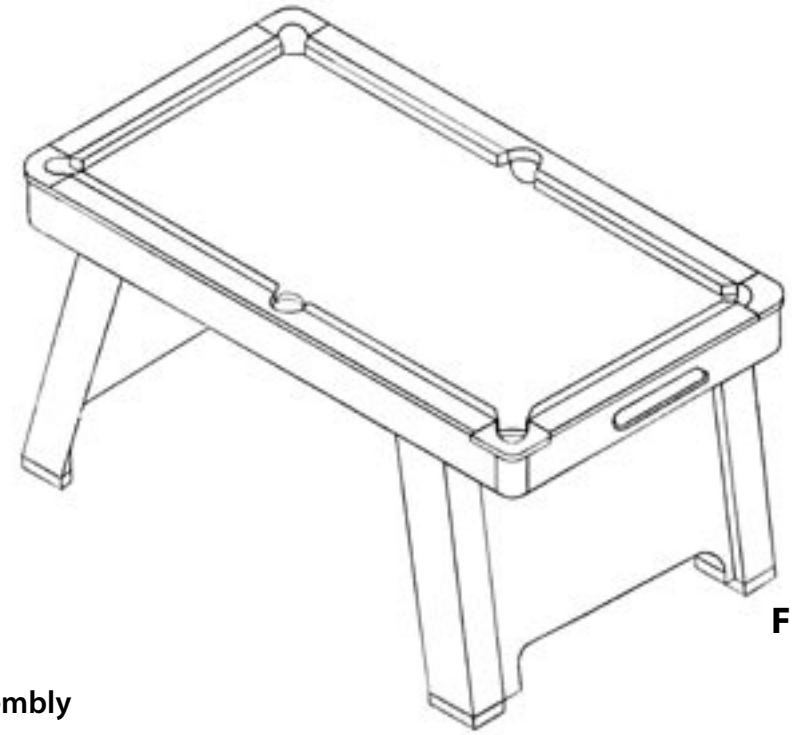

FIG 3.1

Conversion Top Assembly

The conversion top comes in two parts. Attach the two parts as shown in Fig. 4.1.
Once the two sides of the conversion top are combined, attach the net as shown in Figure 5.1.

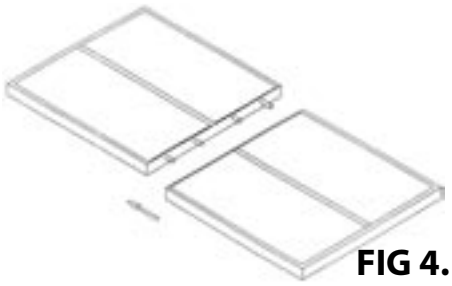

FIG 4.1

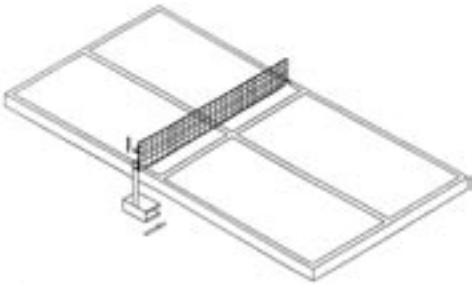

FIG 5.1

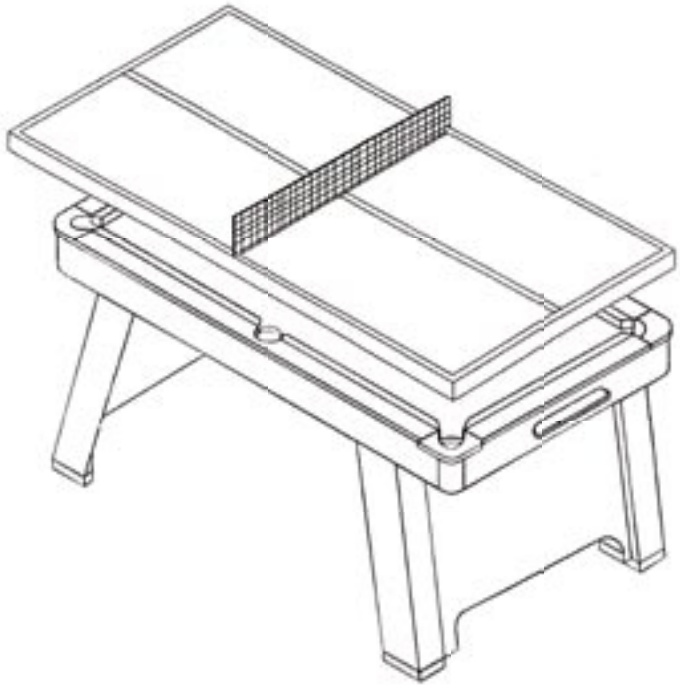

INSTRUCTIONS FOR LEVELING A POOL TABLE

- **Assemble pool table according to the instructions, making sure levelers are screwed in completely, then turning one full turn out.**
- **Any type of level would be sufficient to perform this procedure. However, a two-foot level is recommended.**
- **Before leveling, make sure level is placed on the playing surface, not the rails.**
- **Level the ends between the corner pockets. Place the level on the playing surface between the two corner pockets and adjust the levelers in or out to position the bubble in the middle of the level.**
- **Repeat the step above to the opposite corner pockets.**
- **Next, level the length of the table. Place the level next to the side pocket and adjust the levelers in or out to position the bubble in the middle of the level.**
- **Repeat the step above to the opposite length of the table.**
- **Recheck both short ends to ensure bubble is in the middle on the level.**
- **Depending on the surface the pool table sits, especially deep pile carpeting, the pool table needs to settle for 24 hours. Recheck the level on each side of the table after 24 hours.**
- **These same instructions may be followed to level hockey and soccer table play surfaces as well.**

PARTS RE-ORDER FORM **MFT200-CT Pool Table**

Send this form along with your check or money order payable to:

DMI SPORTS
375 Commerce Drive
Fort Washington, PA 19034
www.dmisports.com

DATE: ____________________

NAME: ______________________________

ADDRESS: ______________________________ PHONE: ____________________

CITY: ____________________ STATE: ____________ ZIP CODE: ______________

REF	QTY	PART#	DESCRIPTION		UNIT PRICE	TOTAL AMOUNT
H1		RPMFT200-BOLT	Leg Bolt	(ea.)	.25	
H2		RPMFT200-WASH	Leg Washer	(ea.)	.25	
A1		MFA40993	Triangle, Plastic	(ea.)	8.00	
A2		MFA42405	Chalk	(ea.)	N/A	
A3		MFA41655	Billiard balls	(ea.)	30.00	
A4		MFR40432	2 Piece Cues	(ea.)	12.00	
A5		RPMFT200-MWRENCH	Wrench, Multi	(ea.)	8.00	
P2		RPMFT200-LEG	Leg	(ea.)	30.00	
P3		MFCT-200	Conversion Top	(ea.)	85.00	
P4		MFCT-200NP	Table Tennis Net Set	(ea.)	15.00	
P5		RPMFT200-LEV	Leg levelers	(ea.)	5.00	
SHIPPING AND HANDLNG:					**Subtotal:**	
Up to $15.00 add $2.00 for S&H					**PA Residents Add 6% State Sales Tax:**	
Over $15.00 add $8.00 for S&H					**Shipping and Handling Charges:**	
					TOTAL:	