GP1660

Colorlite™ Kaleidoscope (Pk/12)

MORE IDEAS...

- Explain how a kaleidoscope works. What other devices use mirrors?
- Use additional craft trims to embellish your kaleidoscope.
- Use leftover tissue paper squares and glitter glaze to create additional Colorlite™ projects.

MAKING IT EASY to SAVE MORE on your next order!

$10 OFF
Your Next Order of only $39.00 or more.

Please mention Offer Code: **M2467**
Minimum order $39 excludes shipping and taxes.
Limit one per order.
May not be combined with other offers or bid or contract pricing.
See current S&S® catalog or Help at ssww.com for Offer Terms and Conditions.
We reserve the right to terminate this offer at any time without notice.

Call Toll-Free
1-800-243-9232

Online:
ssww.com

Customer Service:
1-800-937-3482

Email:
cservice@ssww.com

FAX:
1-800-566-6678

S&S® Worldwide

© Copyright 2012 S&S® Worldwide Inc. All rights reserved. No part of this project may be copied or duplicated without the express written permission of S&S Worldwide.

Reorder Number
GP1660 | 1.2

S&S® Worldwide
MAKING IT EASY
to Help People Play and Learn

Gee-Perz®
Just Add Imagination... We Provide the Rest!

Colorlite™ Kaleidoscope (Pk/12)

PLEASE READ ALL INSTRUCTIONS BEFORE STARTING

YOUR KIT CONTAINS:
- Tubes
- Die Cut Shapes
- Tissue Paper Squares
- Paper Fasteners
- Glitter Glaze & Brushes
- Plastic Circles
- Mirror Sheets
- Glue

AGE GROUP: 7 and up
PREP TIME: 5 minutes
PROJECT TIME: 45 minutes

YOU WILL NEED:
- Tape
- Scissors

GP1660

INSTRUCTIONS:

1. Select one egg shaped cardboard ring, one tube, and one small cardboard circle. Apply white glue to both ends of the tube. Glue the ring and circle in place as shown in Figure A. Let dry. Decorate the tube by decoupaging tissue paper squares onto the tube using glitter glaze.

FIGURE A

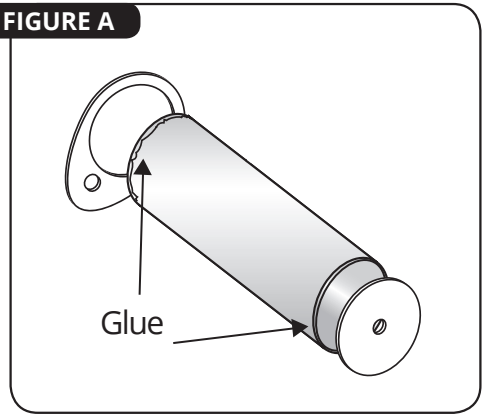

2. Using glitter glaze, decoupage tissue paper squares onto one side of the clear circle (see Figure B). Be sure to cover the entire circle with tissue squares. Coat entire decoupaged surface with an additional coat of glitter glaze. Let dry.

FIGURE B

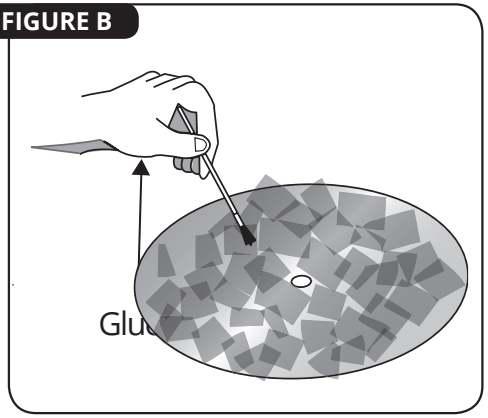

3. Trim any excess tissue paper from the edges of the decoupaged circle. Select one large cardboard ring. Slip the decoupaged circle under the tabs on the ring. Glue in place. Let dry.

4. Select one mirror sheet. Fold in thirds lengthwise. Tape edges together to form a long triangle shape. Slide mirror sheet into cardboard tube (see Figure C).

FIGURE C

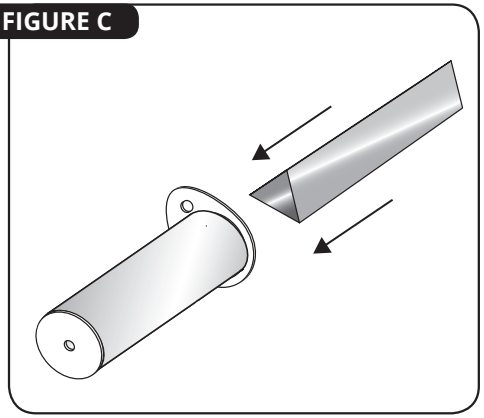

5. Using a paper fastener, affix the Colorlite™ wheel to the kaleidoscope as shown in Figure D.

Hold your kaleidoscope up to the light and slowly turn the ring.
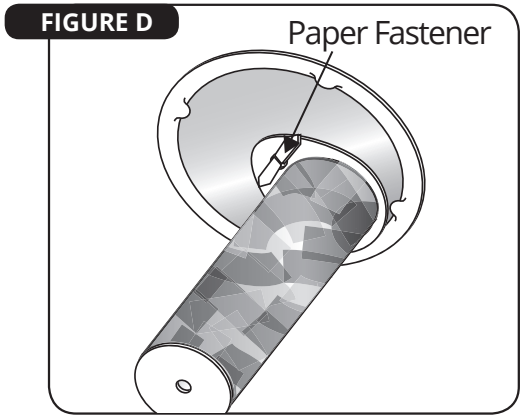
FIGURE D